VELARI

LUXO|Furniture

Dining Banquette Bench

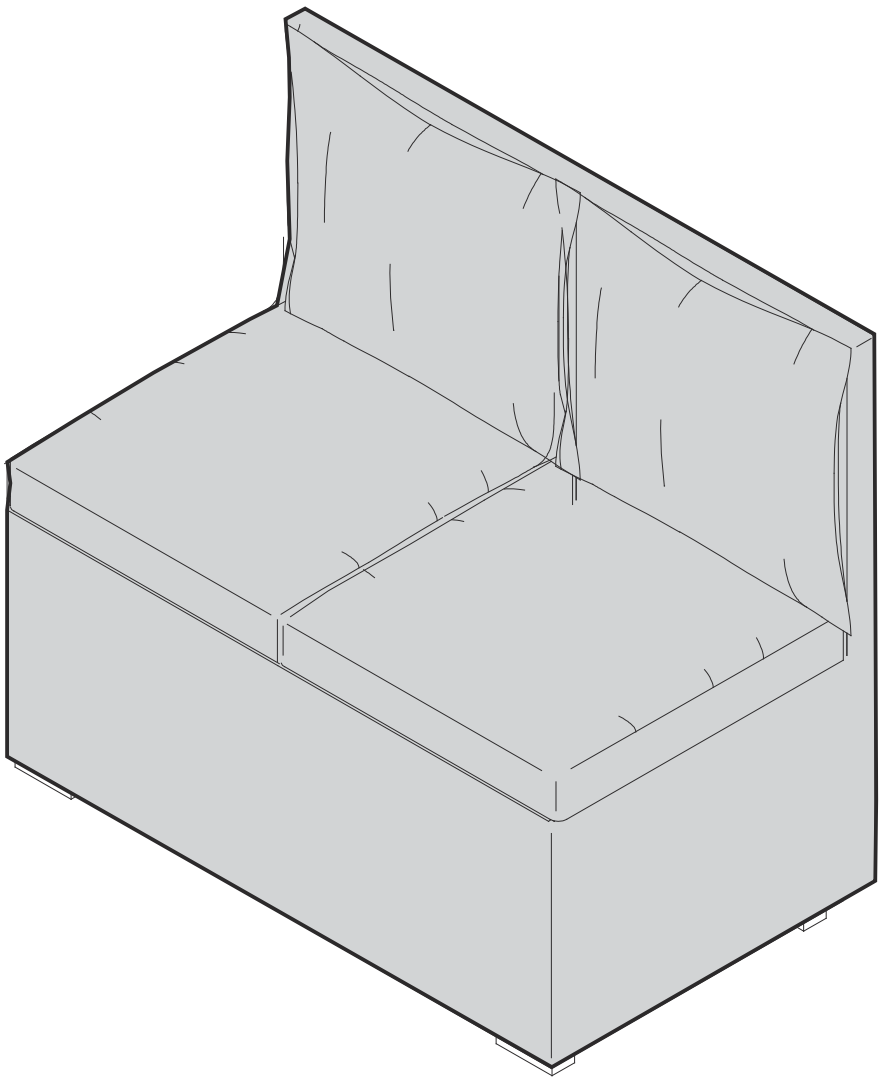

USE OF POWER TOOLS TO ASSEMBLE THIS PRODUCT INVALIDATES ANY CLAIM AS IT MAY DAMAGE THE PRODUCT MAKING IT UNSAFE TO USE.

ASSEMBLY INSTRUCTIONS

THANK YOU FOR YOUR PURCHASE!

We hope you enjoy this product as much as we enjoyed making it!
We suggest you spend **5 minutes** in reading these tips
before assembling the unit. Strictly follow the instructions step by step.

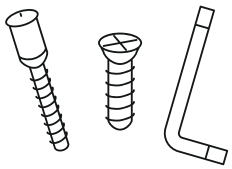

Tool Check

Check contents to ensure that you have the specified quantity for all identified parts and metal fittings.

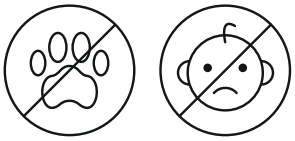

Safety Check

Keep children and pets away from working area as unit has small parts that are choking hazards if swallowed.

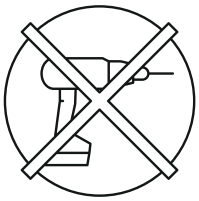

Do Not Use Power Tool

Do not use any power tool for assembly as it may damage the unit and make it unsafe to use. Use of any power tool will invalidate any claim you may have.

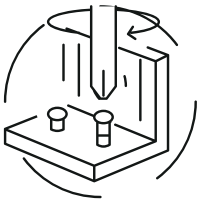

Easier Assembly Tip

We strongly advise that all fittings be finger-tightened during the initial assembly phase. You may fully tighten them all once assembly is complete.

HARDWARE LIST

Please check if you have all the fittings and tools listed below.

A

Ø8mm WASHER
4 PCS

B

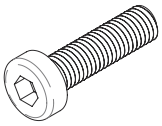

M8x30mm BOLT
4 PCS

C

ALLEN KEY
1 PC

D

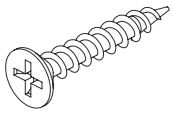

SELF-TAPPING SCREW
8 PCS

E

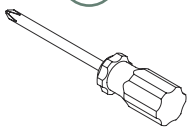

SCREWDRIVER
1 PC

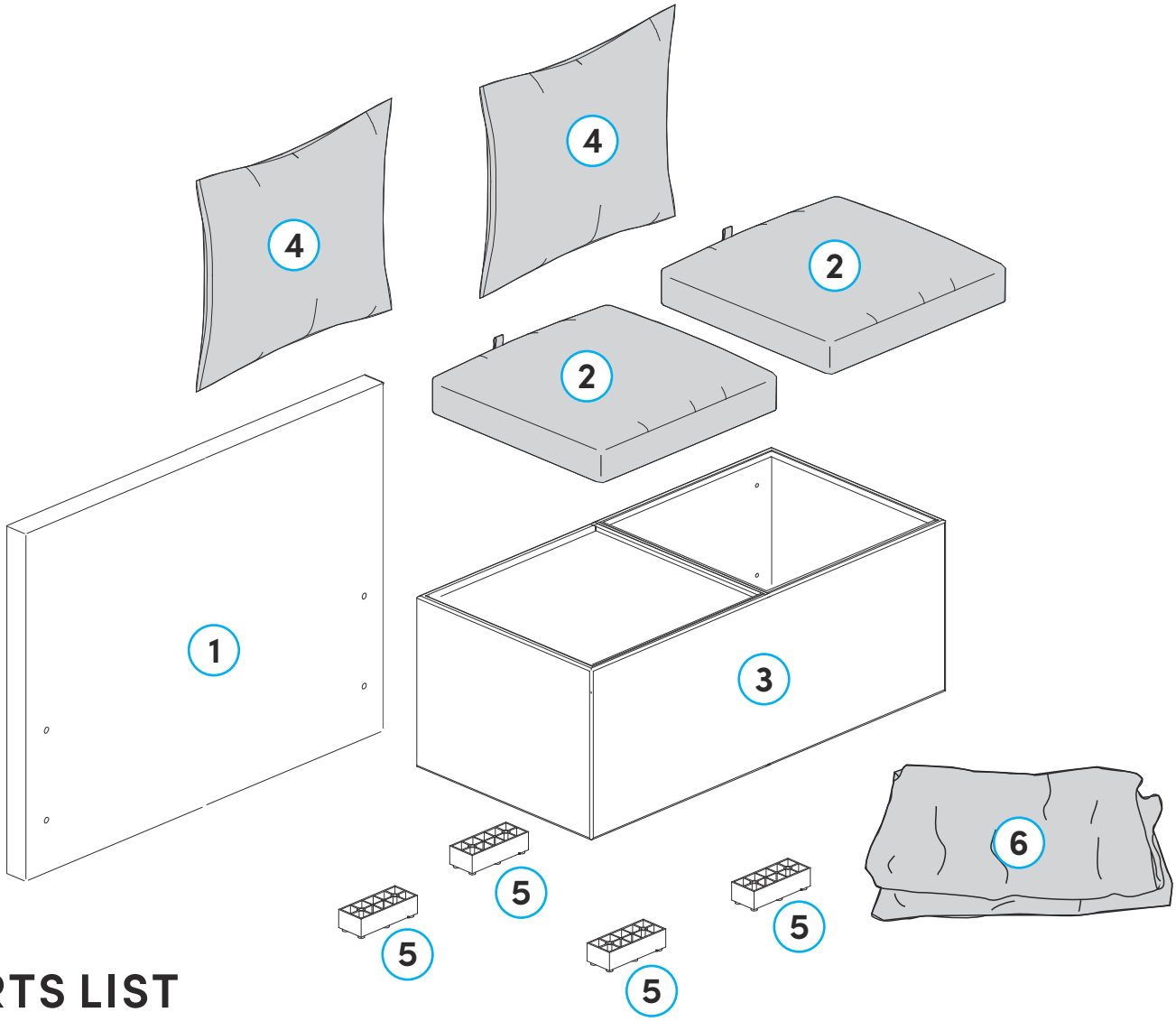

PARTS LIST

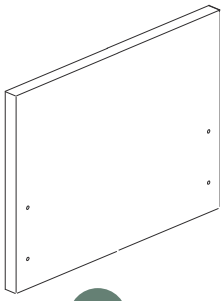

1 x1

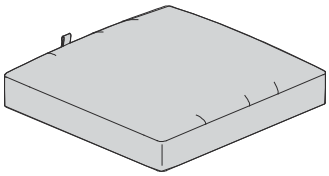

2 x2

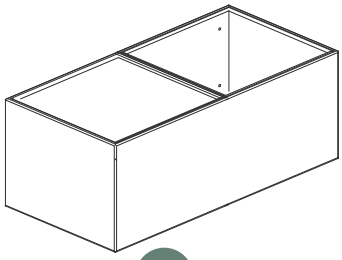

3 x1

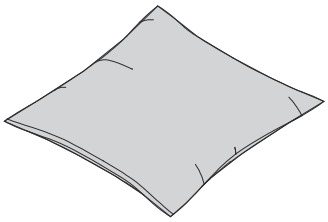

4 x2

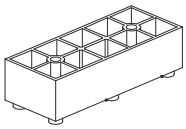

5 x4

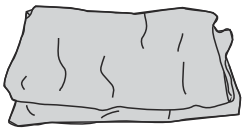

6 x1

STEP 1

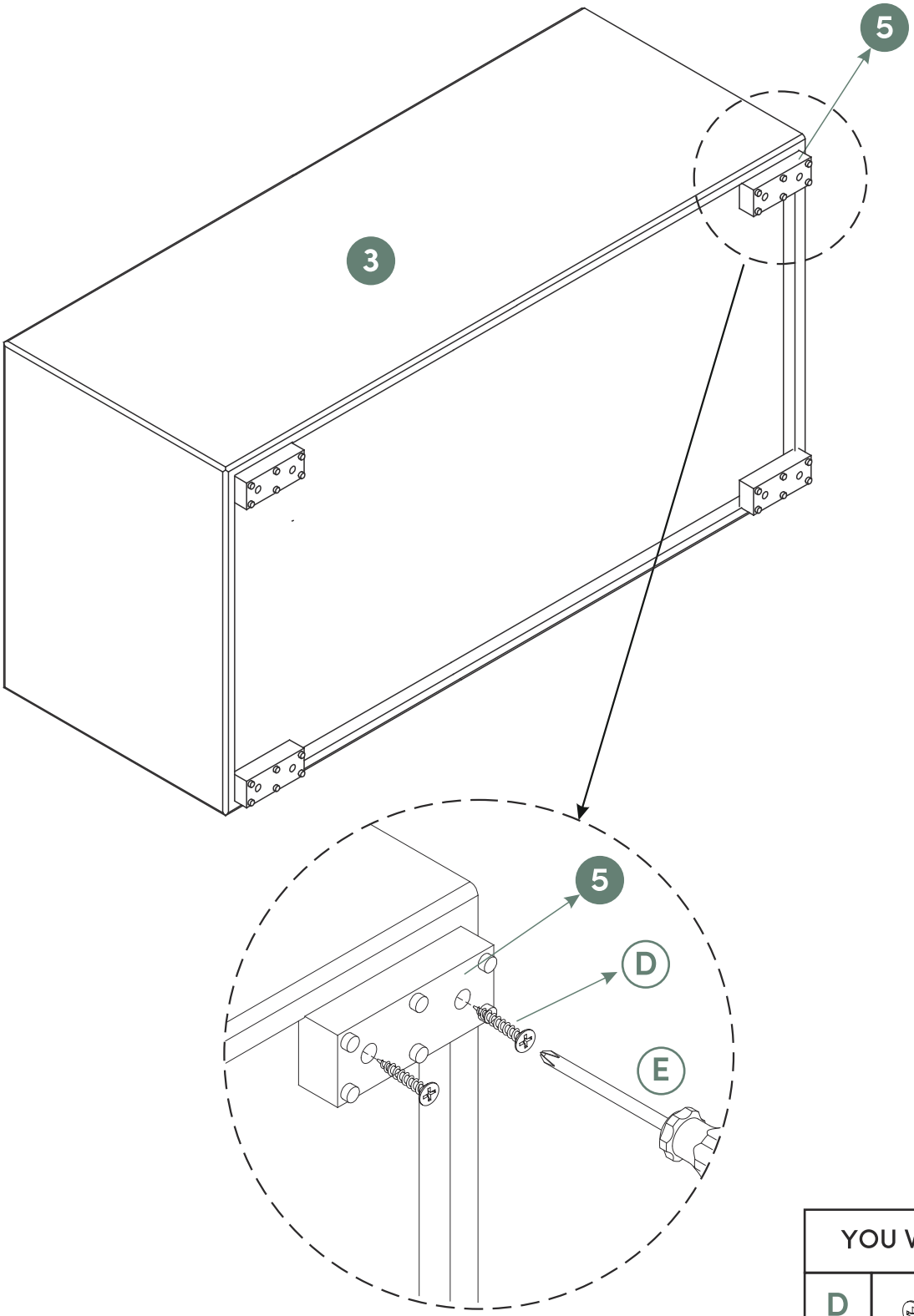

YOU WILL NEED		
D		x8
E		x1

ASSEMBLY STEPS

STEP 2

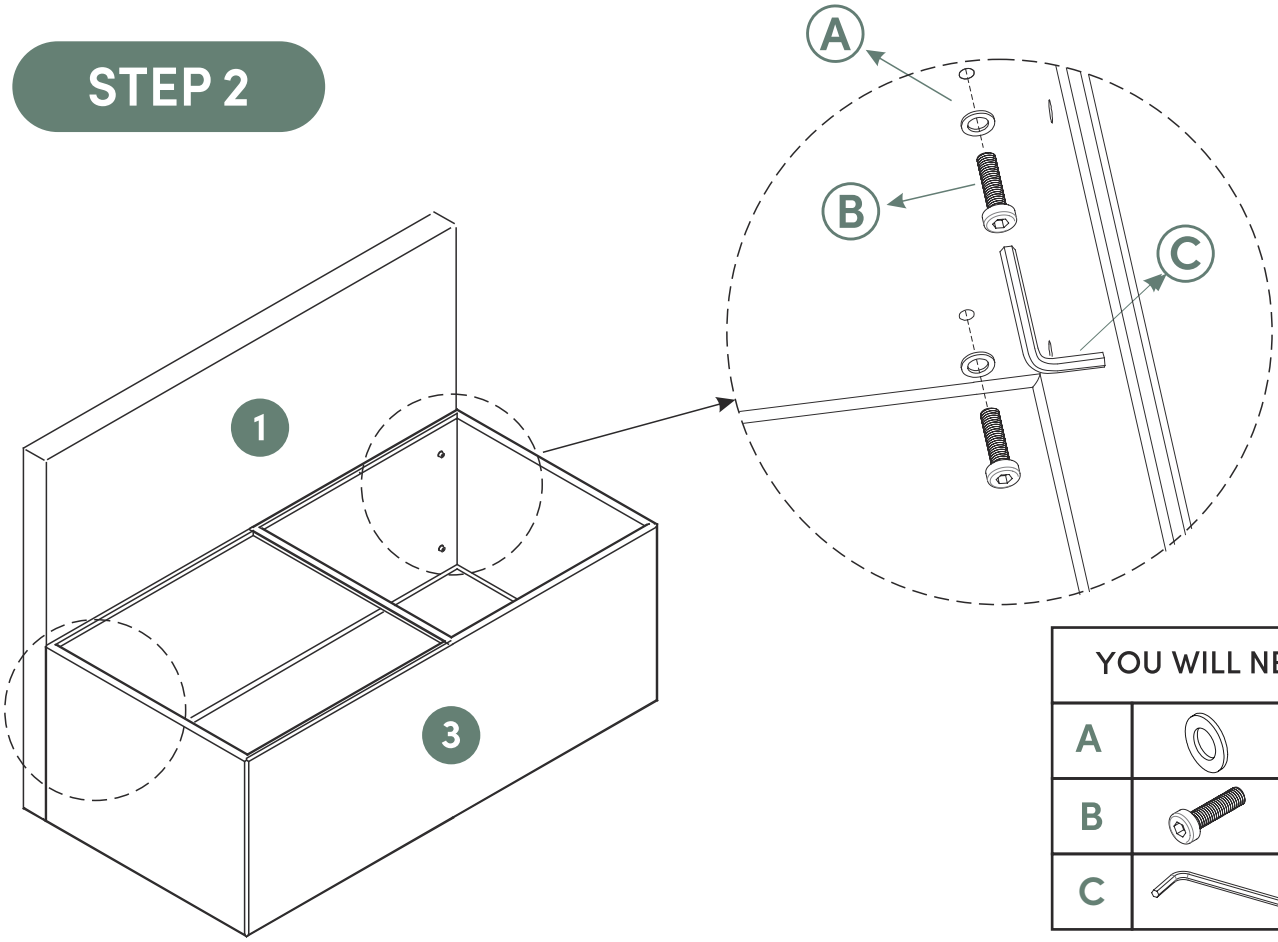

YOU WILL NEED		
A		x4
B		x4
C		x1

STEP 3

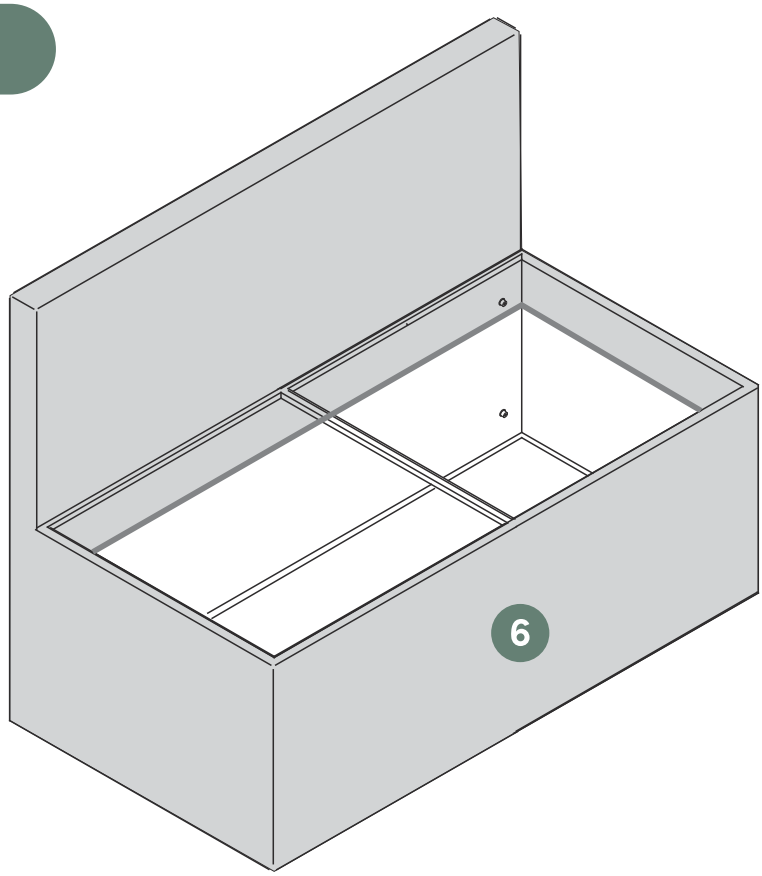

ASSEMBLY STEPS

STEP 4

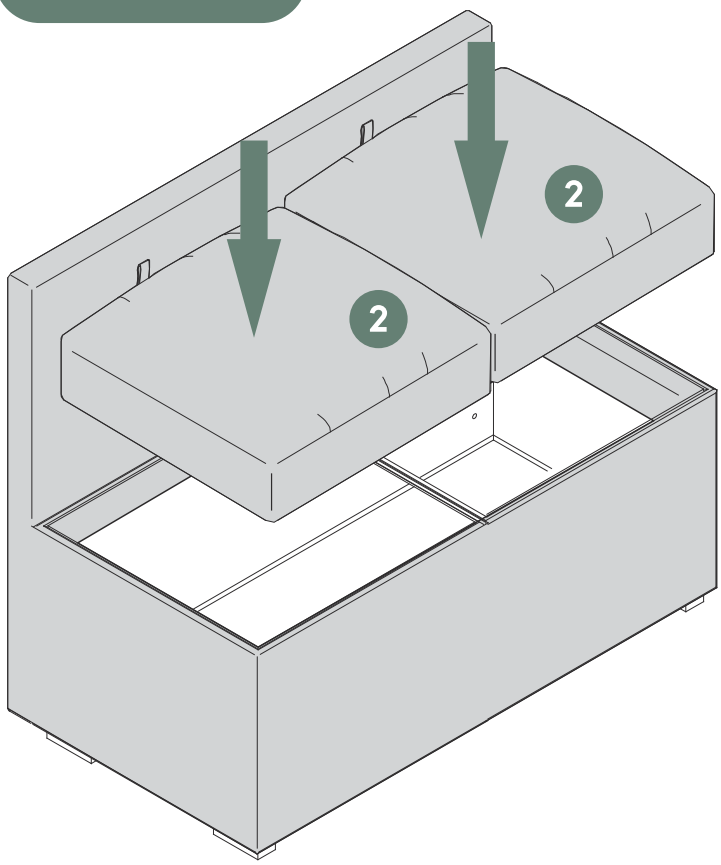

Tip for installing the seat cushion:
1. Insert the front edge first.
2. Then press down the back (near the backrest).
3. Keep the pull strap outside, don't tuck it in.

✅ This makes it easy to lift the cushion and open/close the storage lid.

STEP 5

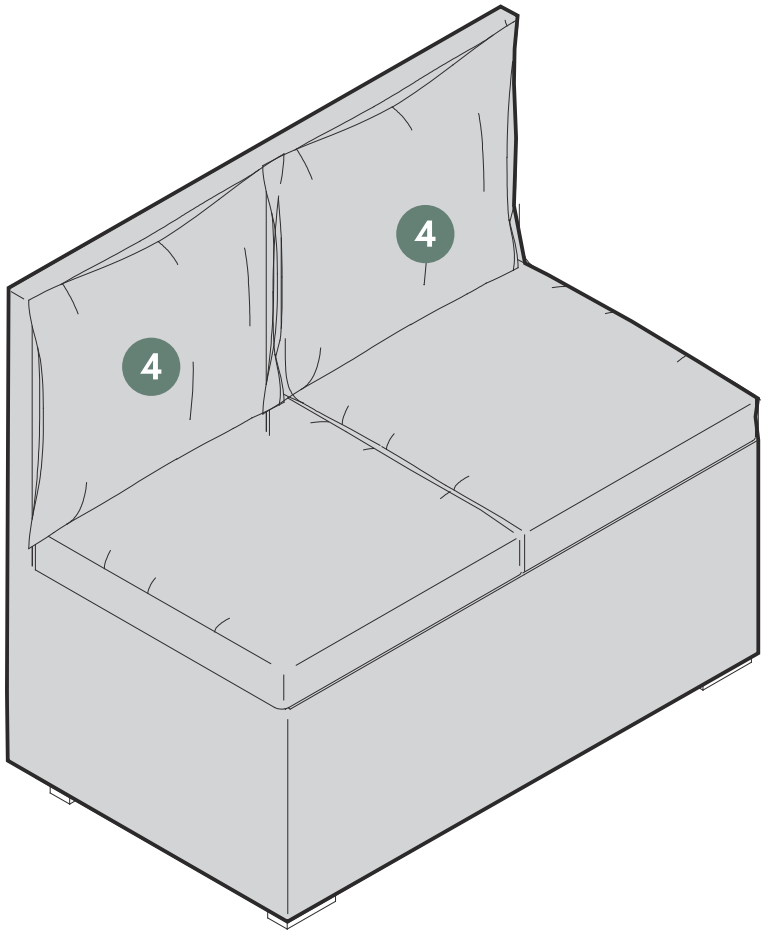

GREAT JOB.YOU'RE DONE!

To move the assembled unit, please lift it up and do not drag to avoid breaking some parts and damaging the floor.

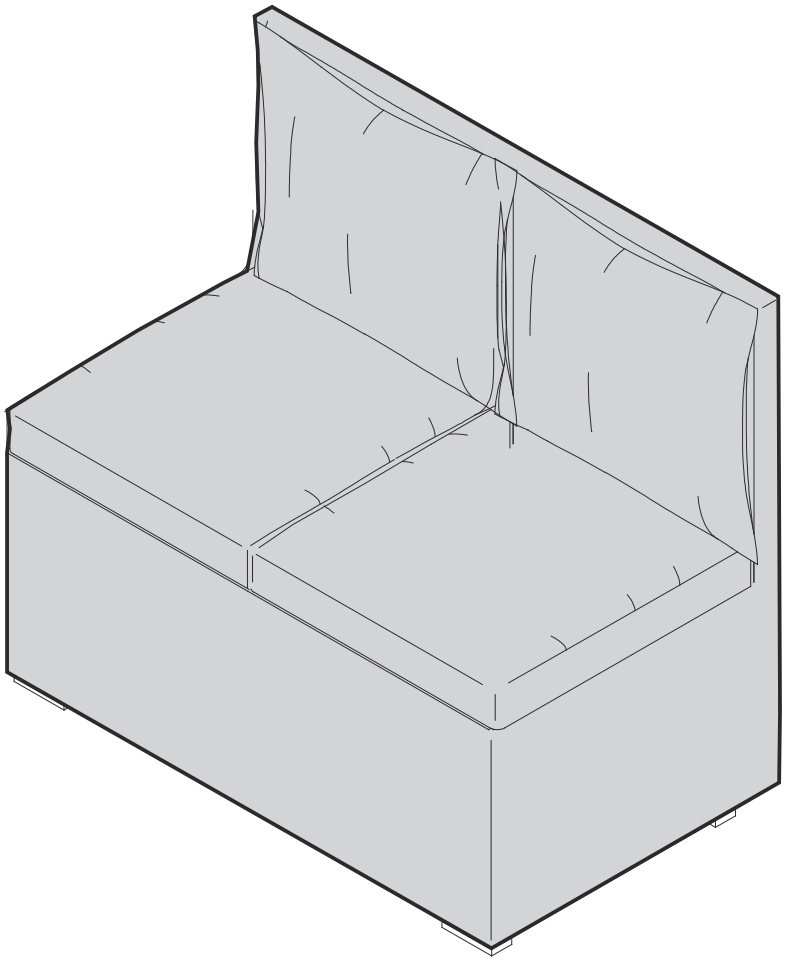

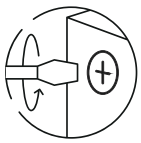

When you assemble this dining banquette, please make sure all screws are fastened tightly. After one or two months, please recheck and make sure all screws are still tight.

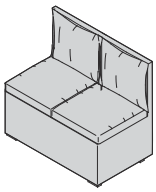

The dining banquette can hold weight of up to 100kg. We don't suggest overloading it beyond its weight capacity.

CARE INSTRUCTION

Follow these basic steps to protect your furniture.

Clean Gently

Use a soft, damp cloth and mild soap solution to wipe down surfaces regularly.

Temperature and Humidity

Keep away from heat sources like stoves and heaters. Avoid direct sunlight and prolonged exposure to high humidity/water. Maintain a consistent room temperature and humidity level.

Use Furniture Pads

Place furniture pads or felt protectors under furniture legs to prevent scratches on floors

Avoid Excessive Weight

Don't overload the dining banquette beyond its weight capacity.

Again, we thank you for your purchase.
You've made our day, and we hope you have a great one too!
Enjoy our product!

For any questions, please call us at 02 8999 1114 or contact our online customer service team through our website.

LUXO|Furniture