OHIO

Boucle Dining Chair

LUXO|Furniture

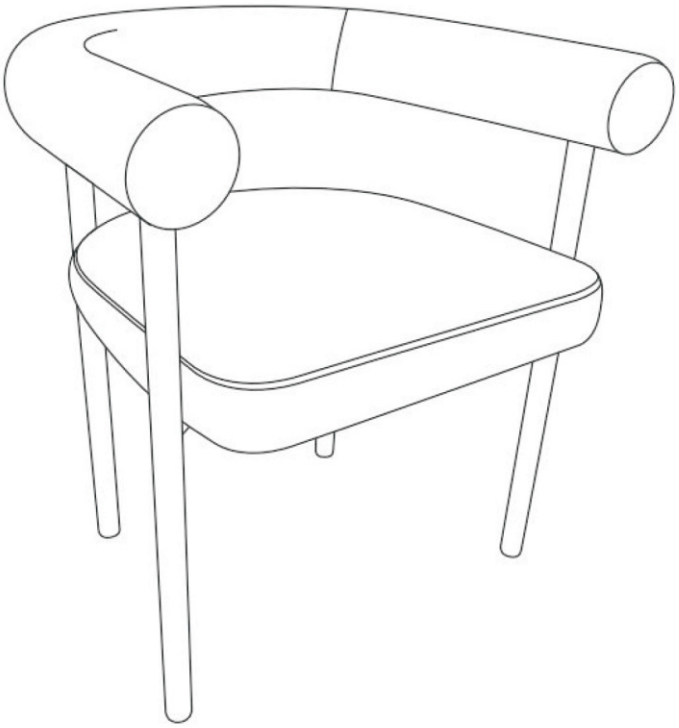

Assembly requires at least 2 persons

USE OF POWER TOOLS TO ASSEMBLE THIS PRODUCT INVALIDATES ANY CLAIM AS IT MAY DAMAGE THE PRODUCT MAKING IT UNSAFE TO USE.

ASSEMBLY INSTRUCTIONS

THANK YOU FOR YOUR PURCHASE!

We hope you enjoy this product as much as we enjoyed making it!
We suggest you spend **5 minutes** in reading these tips
before assembling the unit. Strictly follow the instructions step by step.

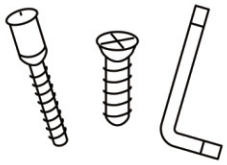

Tool Check

Check contents to ensure that you have the specified quantity for all identified parts and metal fittings.

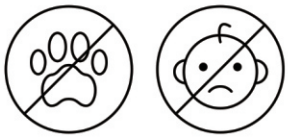

Safety Check

Keep children and pets away from working area as unit has small parts that are choking hazards if swallowed.

Do Not Use Power Tool

Do not use any power tool for assembly as it may damage the unit and make it unsafe to use. Use of any power tool will invalidate any claim you may have.

Easier Assembly Tip

We strongly advise that all fittings be finger-tightened during the initial assembly phase. You may fully tighten them all once assembly is complete.

Scan the code to access the assembling video

HARDWARE LIST

Please check if you have all the fittings and tools listed below.

A

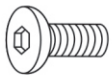

M6x16mm BOLT
4 PCS

B

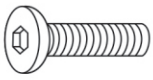

M6x25mm BOLT
1 PC

C

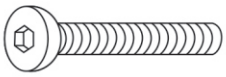

M6x45mm BOLT
4 PCS

D

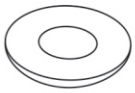

FLAT WASHER
5 PCS

E

FLAT WASHER
4 PCS

F

ALLEN KEY
1 PC

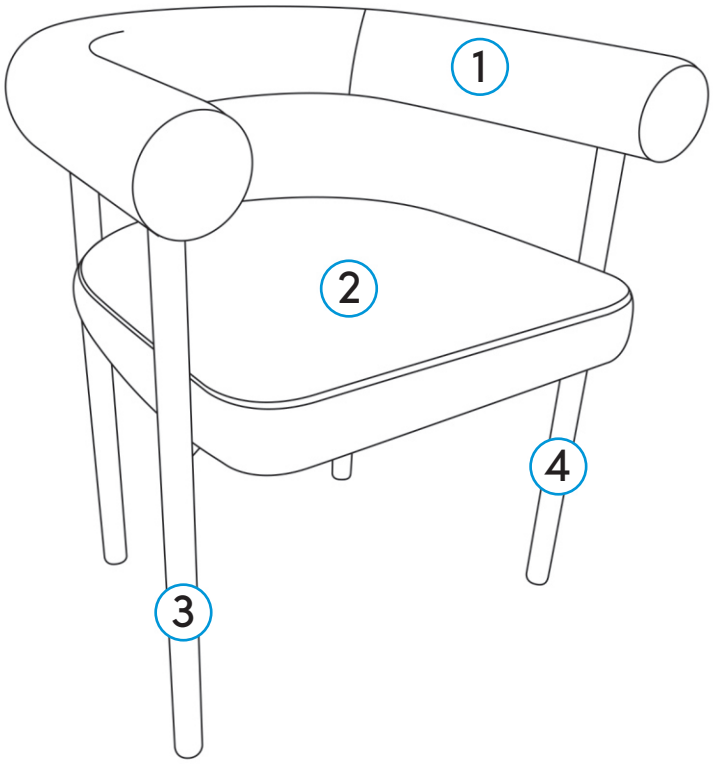

PARTS LIST

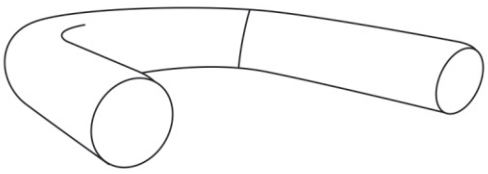

1 x1

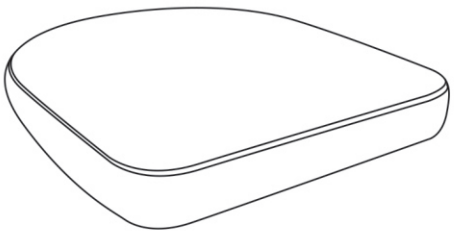

2 x1

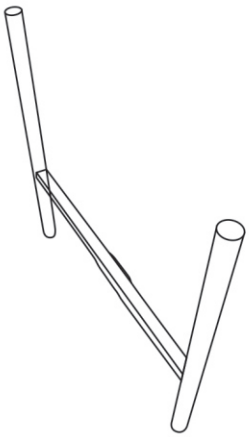

3 x1

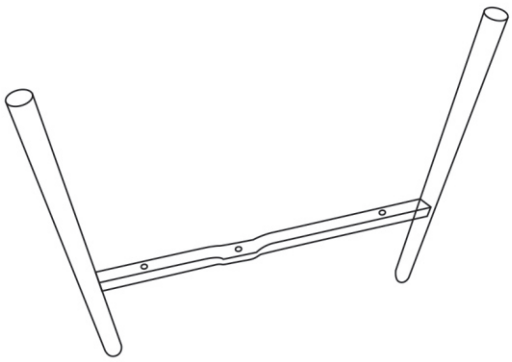

4 x1

STEP 1

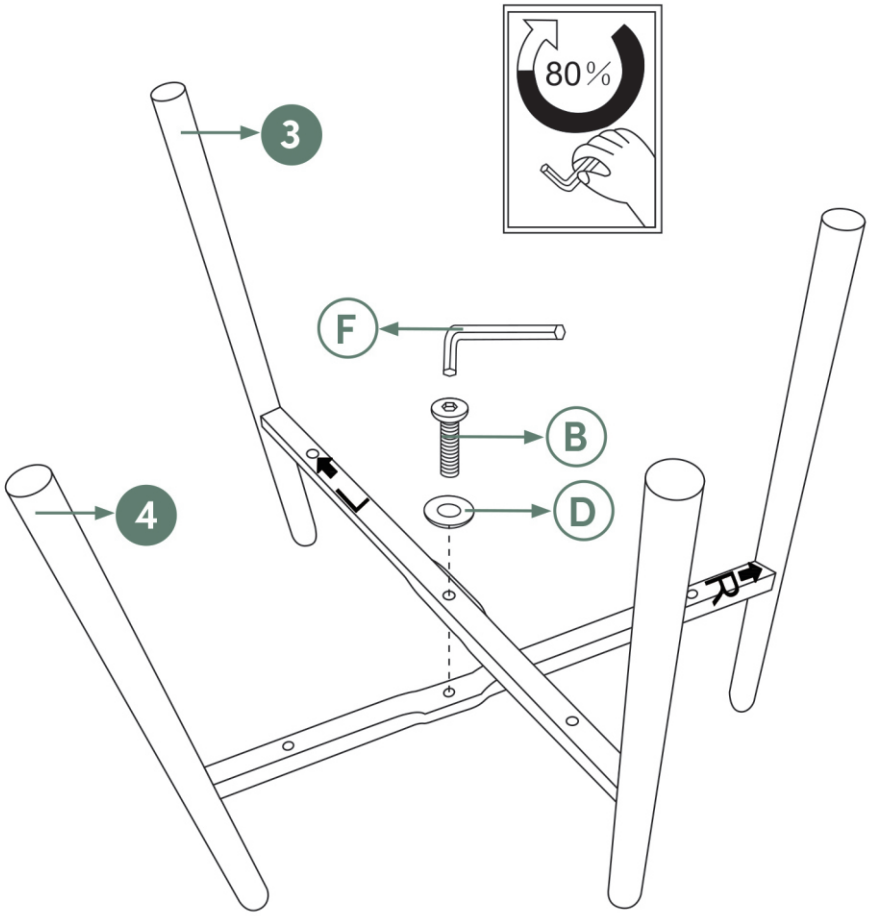

YOU WILL NEED		
B		x1
D		x1
F		x1

ASSEMBLY STEPS

STEP 2

Remove 4pcs of plastic protector before assembling.

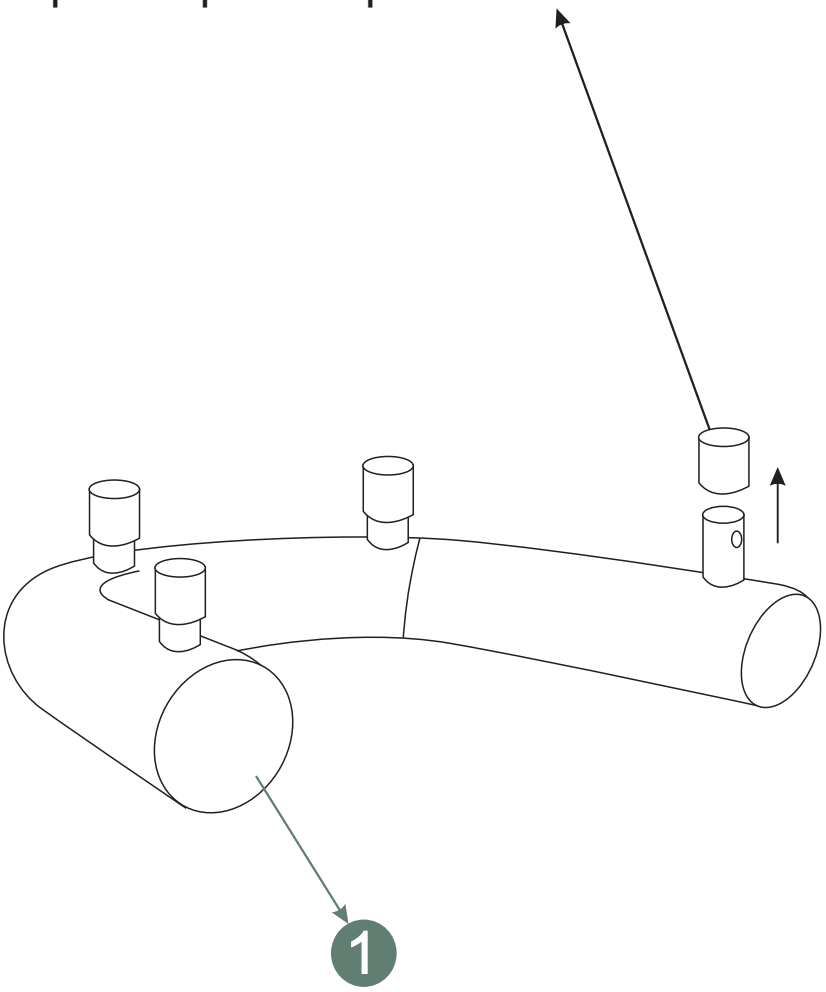

STEP 3

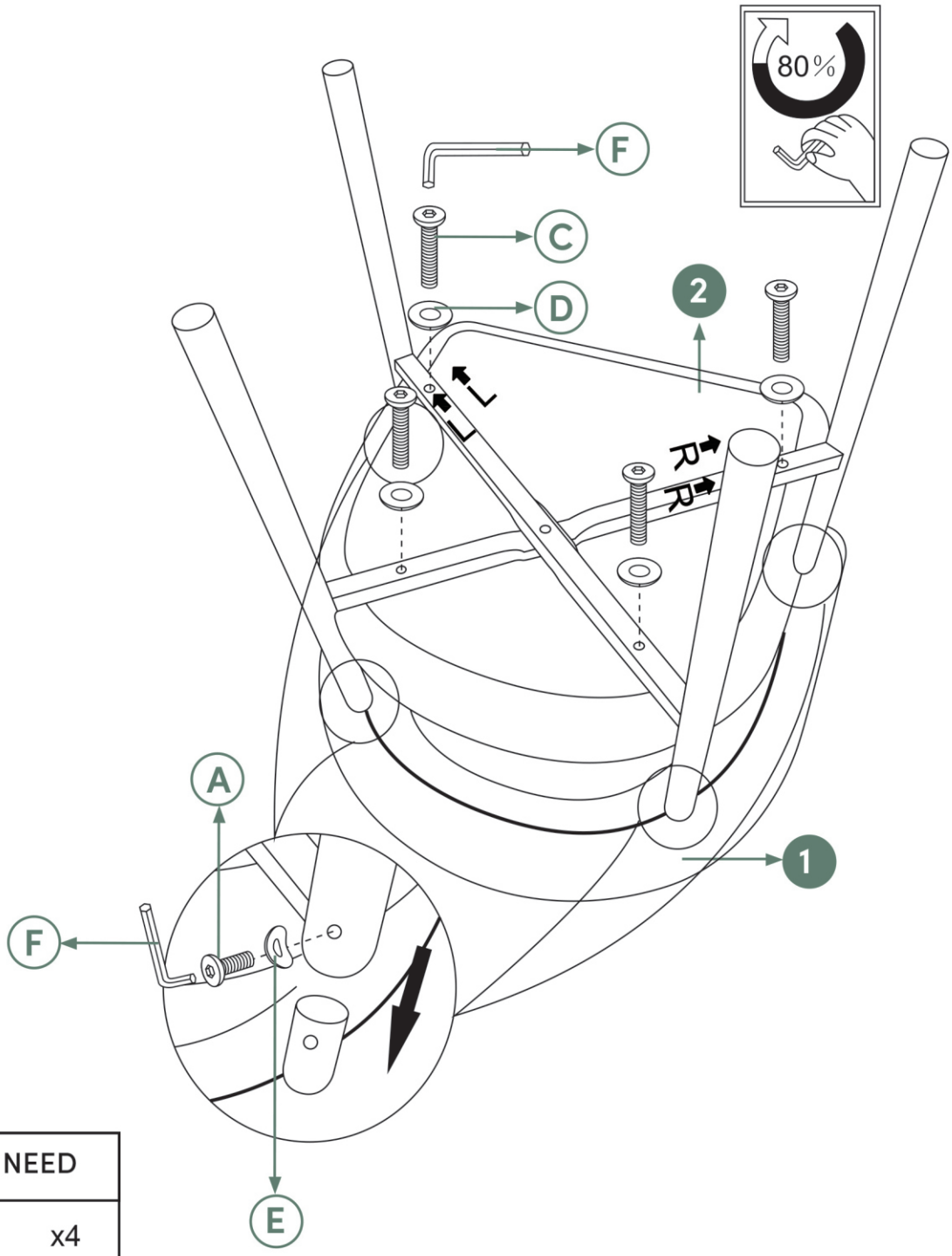

YOU WILL NEED		
A		x4
C		x4
D		x4
E		x4
F		x1

ASSEMBLY STEPS

STEP 4

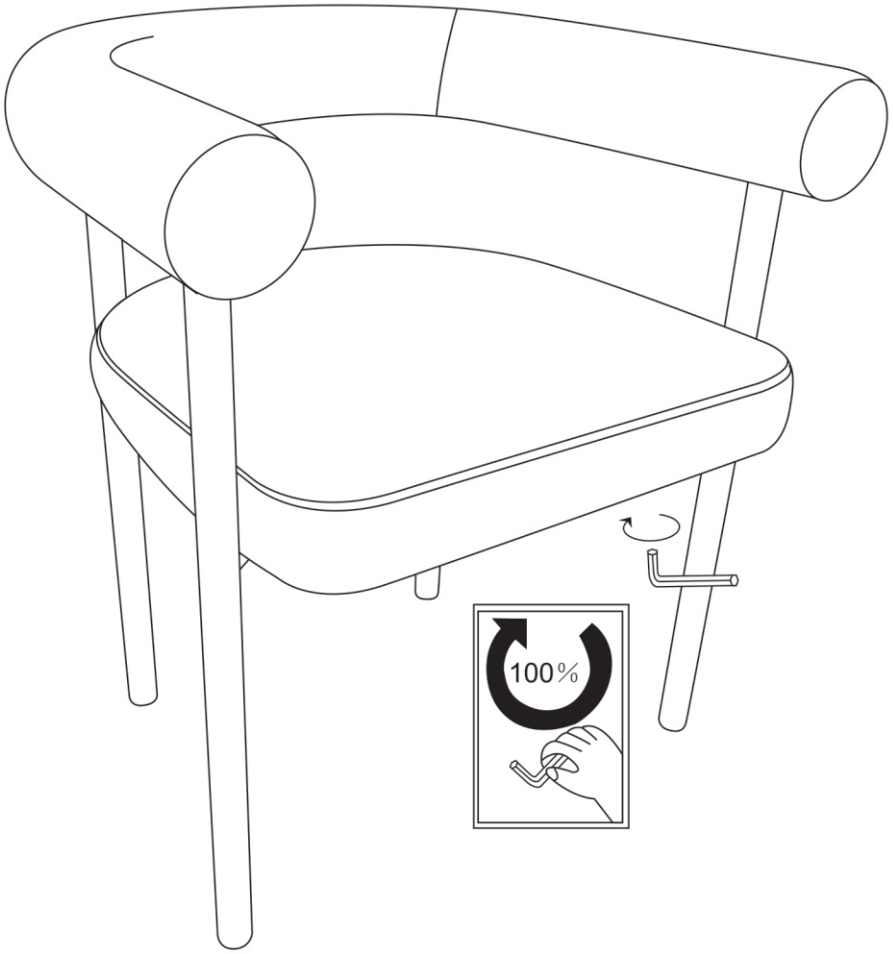

YOU WILL NEED	
F	x1

ASSEMBLY STEPS

GREAT JOB. YOU'RE DONE!

To move the assembled unit, please lift it up and do not drag to avoid breaking some parts and damaging the floor.

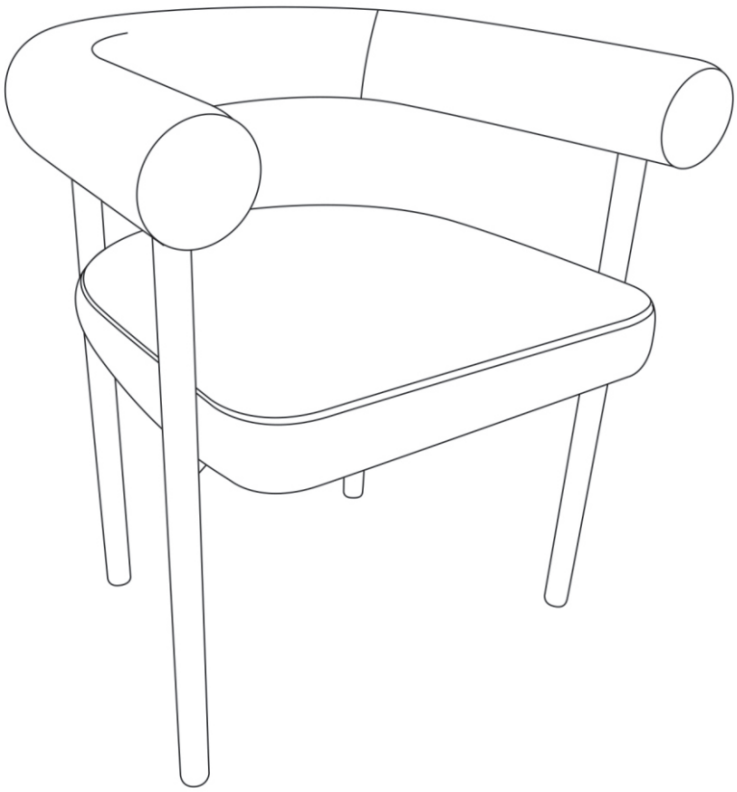

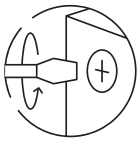

When you assemble this chair, please make sure all screws are fastened tightly. After one or two months, please recheck and make sure all screws are still tight.

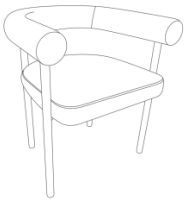

Our chair can hold weight of up to 120kg. We don't suggest overloading it beyond its weight capacity.

CARE INSTRUCTION

Follow these basic steps to protect your furniture.

Clean Gently

Use a mild fabric cleaner or a solution of water and mild detergent. Dampen a soft cloth and gently blot the stain. Do not rub to avoid fabric damage. After cleaning, allow the fabric to air dry but not direct heat dry to avoid fabric shrinkage or damage.

Temperature and Humidity

Avoid direct sunlight. Maintain a consistent room temperature and humidity level to prevent discolouration.

Use Furniture Pads

Place furniture pads or felt protectors under the furniture legs to prevent scratches on floors.

Avoid Excessive Weight

Don't overload the chair beyond its weight capacity.

Again, we thank you for your purchase.
You've made our day, and we hope you have a great one too!
Enjoy your furniture!

For any questions, please call us at 02 8999 1114 or contact our online customer service team through our website.

LUXO|Furniture